PZ 4

Weidmüller Interfaces GmbH & Co. KG

Postfach 3030

32760 Detmold

Tel. +49 5231 14-0

Fax. +49 5231 14-2083

info@weidmueller.com

www.weidmueller.com

Crimping tools for wire end ferrules, with and without plastic collars

- Ratchet guarantees precise crimping
- Release option in the event of incorrect operation

General ordering data

Version	Pressing tool, Crimping tool for wire-end ferrules, 0.5mm², 4mm², Trapezoidal crimp
Order No.	9012500000
Type	PZ 4
GTIN (EAN)	4008190090920
Qty.	1 pc(s).
Replacement parts	9012540000 9202810000

PZ 4

Weidmüller Interfaces GmbH & Co. KG

Postfach 3030

32760 Detmold

Tel. +49 5231 14-0

Fax. +49 5231 14-2083

info@weidmueller.com

www.weidmueller.com

Technical data

Dimensions and weights

Width	200 mm	Width (inches)	7.874 inch
Net weight	425.6 g		

Environmental Product Compliance

REACH SVHC	Lead 7439-92-1	SCIP	b28ab223-64ec-44cf-adb0-4dd6ebcae141

Technical data

Description of article	(1)Crimping tool	Version	Mechanical, without interchangeable inserts

Description of contact

Conductor cross-section, max. AWG	AWG 12	Conductor cross-section, min. AWG	AWG 21
Crimping range, max.	4 mm²	Crimping range, min.	0.5 mm²
Type of contact	Wire-end ferrules with/ without plastic collars		

tool data crimping

Crimping type/profile	Trapezoidal crimp	Wire end ferrules cross-section, max.	4 mm²
Wire end ferrules cross-section, min.	0.5 mm²		

Classifications

ETIM 6.0	EC000168	ETIM 7.0	EC000168
ETIM 8.0	EC000168	ECLASS 9.0	21-04-38-11
ECLASS 9.1	21-04-38-11	ECLASS 10.0	21-04-38-11
ECLASS 11.0	21-04-38-11	ECLASS 12.0	21-04-38-11

Approvals

Approvals

Downloads

Engineering Data	WSCAD
User Documentation	Manual
Catalogues	Catalogues in PDF-format
Brochures	

PZ 4

Weidmüller Interfaces GmbH & Co. KG

Postfach 3030

32760 Detmold

Tel. +49 5231 14-0

Fax. +49 5231 14-2083

info@weidmueller.com
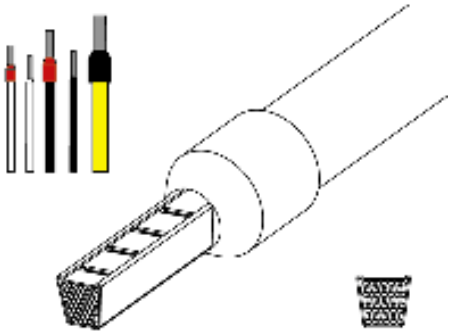
Drawings